Modeling Charging of Electric Vehicles in Smart Cities: Charles Square Use Case

Michal Lom
Faculty of Transportation Sciences
Czech Technical University in Prague
Prague, Czech Republic
lommicha@fd.cvut.cz

Ondrej Pribyl
Faculty of Transportation Sciences
Czech Technical University in Prague
Prague, Czech Republic
pribylo@fd.cvut.cz

Abstract—**The main objective of this paper is to demonstrate a novel method for modeling smart cities and to introduce a use case study related to charging of electric vehicles. This use case is focusing on the research question: how many charging stations are needed to fulfill the dynamic demand for charging of electric vehicles. If electric vehicles become a mass product, it will be necessary to build many charging stations. On the other hand, the charging time will be significantly different from conventional cars and hardly as fast as conventional cars have (at least in the near future). In case of trucks, this will be even bigger difference. We can expect significant improvements in the speed of charging of batteries in the future. In this paper, we do not want to predict what will be the future, but rather demonstrate what will be the impact if we consider the number of charging stations, electric vehicles and charging time. This is a dynamic problem and the usage of a novel SMACEF framework using Multi-agent systems is proposed as a suitable tool for this use case, as well as other smart city related problems.**

Keywords: Smart City, Charging Station, Modeling, SMACEF, Electric Vehicle, CAV

I. INTRODUCTION

Modeling of smart cities is a challenging problem that needs to take into consideration dynamic interactions of heterogonous subsystems and all this in a distributed environment [1]. For this purpose, the authors developed their own modeling approach called SMArt City Evaluation Framework (SMACEF) which is described in detail in the paper [2]. To demonstrate its usefulness, in this paper, the framework is demonstrated on a case study dealing with charging of electric vehicles (EVs). The charging of EVs is a big research topic and many papers were published related to especially optimal deployment and planning.

The paper [5] presents a study on the location of electric-vehicle charging stations for an area of Lisbon characterized with a strong concentration of population and employment. This type of area is appropriate for slow charging because vehicles stay parked for several hours within a 24-h period. The methodology used there is based on a maximal covering model to optimize the demand covered within an acceptable level of service and to define the number and capacity of the stations to be installed. The results clearly indicate that such methodology can be useful in the future planning of electric mobility systems.

In the paper [6], a formal framework is presented to optimally deploy charging stations for EVs in a given area. The framework designs this verification as a constraint satisfaction problem where the goal is to optimally place the charging stations, with enough charging outlets at each station, to serve all EVs in a given area while satisfying the limited budget and other system constraints. The proposed framework is evaluated for its analysis capability as well as its scalability by performing simulation on different synthetic test cases.

In the paper [7], a multi-period optimization model based on a flow-refueling location model for strategic charging station location planning is formulated. Two myopic methods are proposed and a case study based on the real traffic flow data of the Korean Expressway network in 2011 is developed.

The paper [8] aims to minimize charging waiting time through intelligently scheduling charging activities spatially and temporally. A theoretical study has been conducted to formulate the waiting time minimized charging scheduling problem and derive a performance upper bound. Based on the insights discovered from the theoretical analysis, a practical distributed scheme has been proposed. Extensive simulation results verify that the proposed design can achieve a waiting time near the theoretical lower bound.

This paper focuses on the following main research question: ***How many charging stations are needed to fulfill the dynamic demand for charging?*** Four key variables are considered – the number of charging stations, the number electric vehicles, the charging time and price of the charging.

The fastest charging stations in the Czech Republic in 2019 have performance of 50 kW. Based on the capacity of a car, the fastest charging time is 30 minutes or more. This significantly changes the waiting time compared to the conventional vehicles. Either many more charging stations will be needed to build compared to conventional fuel stations (this will be strongly limited by a capacity of electrical plants), or drivers must wait more time. In this paper, the possible scenarios are modeled by SMACEF and simulated in AnyLogic tool.

II. DO WE REALLY NEED TO MODEL IT?

Let us imagine the following very simplistic case with a charging station. The goal of this exercise is to find an analytic solution. There can arrive 5 vehicles per hour to the charging station. Only one vehicle can be charged at one charging station. The Mean charging time is 10 minutes (only for demonstrating purposes). We would like to find out the Mean waiting time in the queue (sec), w. The analytic solution is [9]:

$$w = \frac{\lambda b^2}{1 - \lambda b},$$

where λ denotes the arrival rate and b denotes the Mean charging time.

The important note is that this holds only for a Poisson stream of vehicles (independent arrivals with constant rate) and exponentially distributed charging time. If the variation of charging time is considered, the equation is as follows:

$$w = \frac{\lambda b^2 \left(1 + C_b^{\,2}\right)}{2\left(1 - \lambda b\right)},$$

where $\mathbf{C_b}$ is the Coefficient of variation of charging time.

As the next step, let us consider more charging stations (K) which is so-called "Multi-server queue model". The analytic solution, which is again valid only for a Poisson stream of vehicles and exponentially distributed charging time, is:

$$w = \frac{Pb}{K\left(1 - \rho\right)},$$

where ρ is system utilization:

$$\rho = \frac{\lambda b}{k},$$

where P is a probability of all charging stations being busy:

$$P = \frac{(K\rho)^K}{K!\left(1 - \rho\right)} P_0,$$

where P_0 is a probability of no vehicles occupied any charging stations:

$$P_0 = \left[\frac{(K\rho)^K}{K!\left(1 - \rho\right)} P_0 + \sum_{i=0}^{K-1} \frac{(K\rho)^i}{i!} \right]^{-1}$$

But what happens when the charging time has a different distribution as is the case in the real world? When breaking this assumption, and keeping all other simplifications, even for such very simplistic example, there is probably existing some complex analytic approach but who will look for it? If we consider that almost any small change in the process make the previous analytic solution void, we can assume that the analytic solution probably does not exist, because even if it exists, who will find it for the real cases with such high complexity? The conclusion is that the only analysis method for such systems that has foreseeable complexity and guarantees the result is a simulation modeling [10].

III. RESEARCH PROBLEM

In this paper, Charles Square in Prague is considered to be deployed by charging stations. EVs ride to/from Charles Square and some of them need to be charged and continue moving to their destinations. All charging stations are connected via the Internet and therefore can communicate with each other. It is considered that charging stations are also able to communicate with EVs around Charles Square. As SMACEF is based on Multi-Agent Systems, the whole model consists of several types of independent agents. The authors have introduced Smart City Agent (SCA) in their previous work, so each under the term agent is meant SCA. The whole system includes *Charging Stations* $C = (c_1 \ldots c_n)$ and *Electric Vehicle* $E = (e_1 \ldots e_n)$. Each station c has maximal charging capacity C_{Cap} (kW); that can charge electricity to a vehicle e. The battery of each vehicle e has an electricity capacity of E_{max} (kW). Each vehicle e has also a consumption rate E_{CR} and the minimum level of electricity E_{min} when sends the request for charging to all stations C. Each station also measure the profit C_P from each charging which depends on the price of electricity C_{PE}.

The following assumptions are made to simplify the theoretical model:

- All stations C have the same charging capacity C_{Cap}.
- All vehicles E have the same electricity capacity E_{max} and consumption rate C_{Cap}.
- All vehicles E can reach any stations C. In other words, we can imagine that all vehicles E are located at an area where they have some minimal amount of electricity to reach any of stations C.
- If all stations C are occupied, an uncharged vehicle e needs to wait until some station is unoccupied.
- All vehicles E start the simulations with full electricity E_{max}, and are fully charged when they are charged.
- A vehicle e sends the request to all stations C, when the capacity of its battery reach E_{min}.
- Consumption rate E_{CR} is the same for all vehicles E.
- Vehicles, which need no charging and thereby will not affect the system, are not considered.

Of course, all of assumptions above can be considered as a part of the model. This simplification has been done in order to show the whole procedure.

IV. SMART CITY EVALUATION FRAMEWORK

The SMACEF is a modular approach that allows in a simple way to model the current state of a system as well as a proposed future state(s) of the system, and based on scenarios and Key Performance Indicators (KPIs) benchmark which proposed solutions are the best one and if it is advantageous for an investor (typically municipality, city, state or private investor) to invest into such solution. In other words, the goal of the framework is to evaluate if proposed solutions are beneficial and useful.

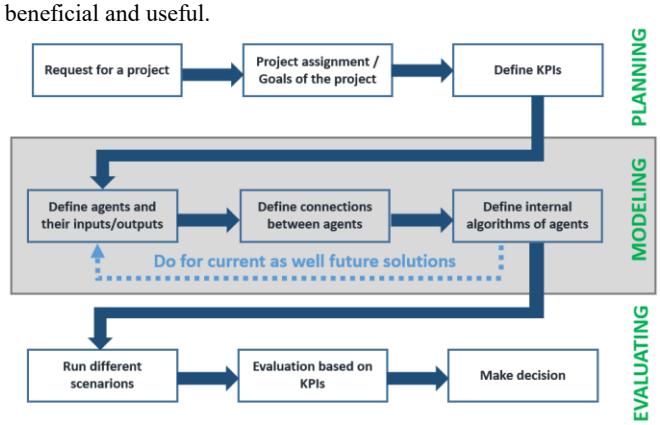

Figure 1 - Overview of the SMACEF

The SMACEF consists of steps shown in Figure 1. The core of the framework is modeling highlighted by grey color. First,

we need to have a request for a new project followed by the definition of a system (project assignment) which should be evaluated and replaced with a new solution.

After having the project assignment, the next step of the SMACEF is to define which KPIs should be measured and benchmarked. The most common KPIs are for example energy consumption, costs, return on investments, time, emission or traffic. The arbitrary number of KPIs can be selected and benchmarked. It is necessary to exactly know which KPIs should be evaluated and benchmarked. The whole framework is fully modular and whatever aspects of benchmarked systems can be considered.

The definition of agents and connections among them is the next step. We can imagine an agent as a software model of a physical object (human, cell phone, car, street lamp, etc.) that based on its perception (sensing) of an environment, where is located, makes certain decision and based on it performed an action affecting the environment. Perception can be seen as inputs into agents and actions as outputs from agents. Firstly, the agents are defined and determined for the current state of a system. As the next step, the future states are defined in the same way. The last step is to find the connections among agents. It means to define the interfaces among inputs and outputs of individual agents.

After defining the agents, their inputs and outputs, and connections among them, an internal logic and parameters of each agent need to be defined. Parameters are internal variables that can be changed to simulate different scenarios. The internal logic defines relationships among inputs, outputs and parameters. The last part of SMACEF is to create scenarios and run them in software tool (e.g. AnyLogic). The results are then evaluated and the final decision can be selected for example based on Multi-criteria analysis.

The goal of the SMACEF is to provide the simple approach for cities to model and evaluate if a solution is beneficial and suitable for them. It means to benchmark the benefits of a new proposed system compared to an existing system. This is achieved by means of selecting any KPIs that are important to the individual city. The SMACEF is fully modular and can be very easily extended. System(s) can be modeled and if it is found necessary to make some changes during the tests or based on the results, it is very simple to add, e.g. some parameters or agents, change the internal logic any of them or make some new connections. The smart city concept is also based on an interconnection of various systems. The SMACEF enables this interconnection of different systems in the same procedure as shown in this paper.

In contrast with static computer programs (e.g Excel), the SMACEF enables to create any model whether static or dynamic. We expect that the biggest benefit of the framework is precisely the creation of dynamic systems and simple evaluating (see Figure 1) through running tests and compares the KPIs of the current system with the future ones. We show it on the specific use case study in the next section [2].

V. MODEL OF THE SYSTEM

Based on the previous sections, the two main Smart City Agents are defined - *Electric Vehicle Agent (EVA)* and *Charging Station Agent (CSA)*. The internal diagram of *EVA* is shown in Figure 2. The *EVA* has two input interfaces – EV_{com} and EV_{energy}. EV_{com} represents the interface which is used for receiving messages from a charging station(s) to the vehicle. The interface EV_{energy} is used for charging the vehicle by electricity from a charging station. The subsequent input connections are defined – EV_i and EV_e. EV_i represents a "communication line" for receiving messages from a charging station. On the other hand, EV_e represents "energy line' which is used for charging the electric vehicle.

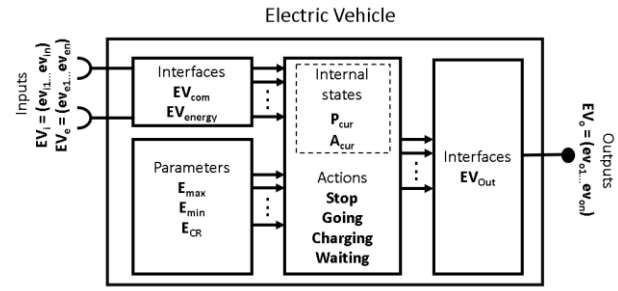

Figure 2 - The internal diagram of Electric Vehicle Agent

The *EVA* has three parameters – E_{max}, E_{min} and E_{CR}. E_{max} is the maximal electricity capacity of the vehicle. E_{min} is the minimum level of electricity when the vehicle sends the request for charging to all stations. E_{CR} represents the consumption rate per minute of driving. These parameters can be easily changed to simulate different scenarios.

Each *EVA* has two internal states – P_{cur} and A_{cur}. P_{cur} represents the remaining performance in the battery. When *EVA* is riding, P_{cur} decreases about E_{CR} per one minute. A_{cur} is the current state of the *EVA* and it may be in one of the following four actions – *Stop*, *Going*, *Charging* or *Waiting*. The state diagram which manages the transitions among actions is shown in Figure 3.

.

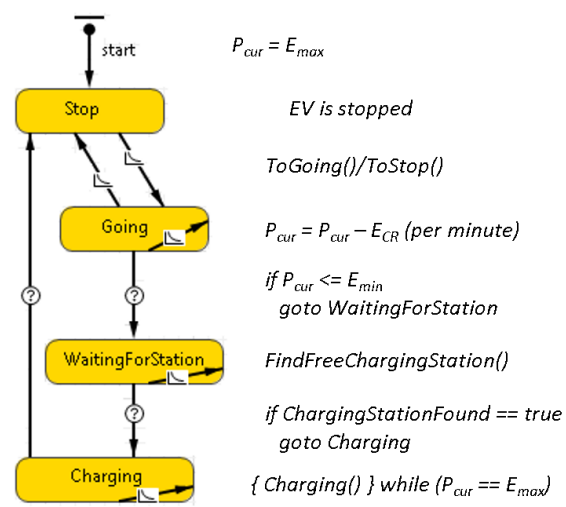

Figure 3 - The state diagram of EVA

The output interface is only one – EV_{Out} which represents the communication interface used for sending messages from *EVA* to a charging station(s). The subsequent output connection is defined – EV_o that represents a "communication line" for sending messages to a charging station.

The *Charging Station Agent (CSA)* is designed in the same way as *EVA*. The diagram of *CSA* is shown in Figure 4. The

CSA has one input interface – CS_{com} that represents the interface which is used for receiving messages from an electric vehicle (s). The subsequent input connection is defined – CS_i that represents a "communication line" for receiving messages from *EVA*.

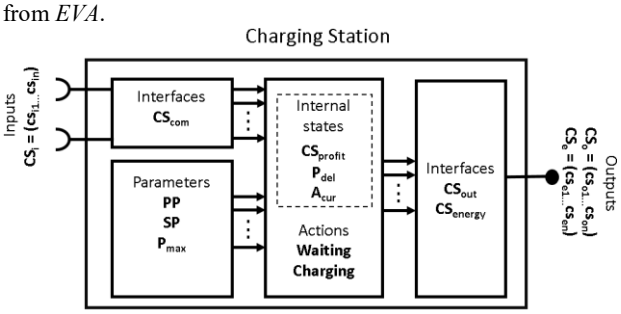

Figure 4 - The internal diagram of Charging Station Agent

The *CSA* has three parameters – *PP*, *SP* and P_{max}. *PP* is the purchase price of electricity from energy network to a charging station. *SP* is the selling price of electricity to *EVA* from *CSA*. To generate a profit, *SP* must be higher than *PP*. P_{max} represents the maximal performance which can be used for charging of *EVA*. Again, these parameters can be easily changed to simulate different scenarios.

The *CSA* has three internal states – CS_{profit}, P_{del} and A_{cur}. CS_{profit} represents the actual profit of *CSA* which is calculated as the difference between *SP* and *PP* (per kW). P_{del} is the delivered performance which has been used for charging *EVA(s)*. A_{cur} is the current state of the *CSA* and it may be in one of the following two actions – *Waiting* or *Charging*. The state diagram which manages the transitions between actions is shown in Figure 5.

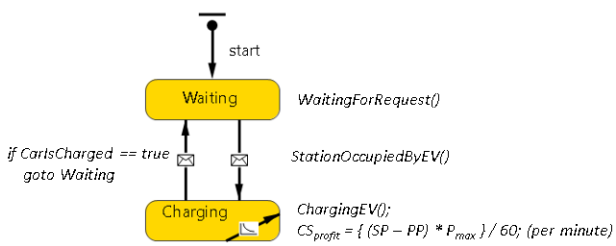

Figure 5 - The state diagram of CSA

The *CSA* has two output interfaces CS_{out} and CS_{energy}. CS_{out} represents the communication interface used for sending messages from *CSA* to an electric vehicle(s). The interface CS_{energy} is used for charging the vehicle by electricity from *CSA*. The subsequent input connections are defined – CS_o and CS_e.

The final diagram showing the interaction between *CSA* and *EVA* is shown in Figure 6. The process is started by *EVA* which sends a request for a charging. If any CSA is free, it confirms the request. If no *CSA* is free, *EVA* must wait in the queue. The last part of the process is a charging of *EVA*.

For the simulation of the Scenario 3 below, there is one additional agent needed that is simulating the dynamic price of energy. The agent is created in the same way as shown in the previous example with *EVA* and *CSA*. The whole model is created in AnyLogic tool.

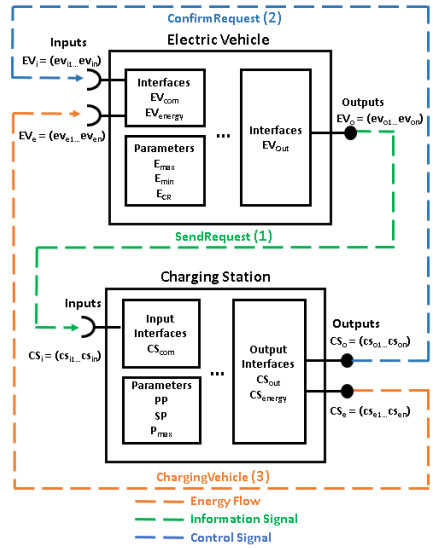

Figure 6 - The interaction diagram between CSA and EVA

VI. SIMULATION AND THE RESULTS

The simulation of the model above is run with three different scenarios. The simulation time is 24 hours. In the model, the charging stations are located at the northeast part of Charles Square as showed in Figure 7. The number of charging stations is various based on the scenarios described below.


Figure 7 - The location of the charging stations in the model

All scenarios are executed 10-times and the average values are calculated. No. of *EVA* is the maximum number of vehicles that can be located at one time in Charles Square. Max waiting time (min) represents the maximum time which some of *EVA* needs to wait for getting a free *CSA*. Mean waiting time in queue (min) means the average time which all *EVA* wait in the queue.

Scenario 1

The first scenario shows the basic simulation. The Charging time, the capacity of battery and the price of electricity are fixed. The preconditions:

- The Charging time is fixed (30 minutes)
- The capacity of battery is 50 kW and the charging starts if the capacity is below 8 kW.
- The price of electricity is fixed
- Each vehicle runs 6 times per day and the battery is discharged by random (drive) intervals

As it can be seen from Table 1, the results show that max. waiting time as well as the maximum number of *EVA* in the queue are very low in the case of the first two simulations. This is done by the fact that the number of *EVA* and *CSA* are low and the charging time is fixed for 30 minutes. The simulation 3

has the same ratio as the simulation 2 – it means the number of *EVA* is four times higher than *CSA*. The results are higher compared to the simulation 2, but not too significantly. It shows that the ratio is very crucial. In the simulation 4, the number of EVA is increased from 60 to 100 compared to the simulation 3. It causes the significant increase of all results. The mean waiting time in the queue is 7.5 minutes and the maximum number of EVA waiting in the queue was 12.

Table 1 - The results of the simulation of the 1st scenario

No. of EVA	No. of CSA	Max waiting time (min)	Max. no. of EVA in the queue	Mean waiting time in the queue (min)
10	5	0,5	1	0.1
20	5	1,2	1	0.3
60	15	2	2	1.1
100	15	16	12	7.5
100	30	2.3	2	0.9

In the last simulation, the number of CSA is increased from 15 to 30 compared to the simulation 4. This causes that the results are come back closely to the first three simulations. Generally, it can be stated that the maximum waiting time and the mean waiting time are acceptable in the simulation 1, 2, 3 and 5. On the other hand, the simulation 4 has the mean waiting time in the queue 7.5 minutes which is still not optimal but still better wait than looking for some other locations with charging stations.

Scenario 2

The second scenario shows the simulation with the fixed price of electricity. The Charging time and the capacity of battery have the distribution according to Table 2.

Table 2 - The distribution of EVA

% of EVA (%)	Charging time (min)	Capacity of battery (kW)
30	30	35
40	45	50
30	60	60

The preconditions:

- The Charging time differs (30-60 minutes)
- The capacity of battery is 35-60 kW and the charging starts if the capacity is below 8 kW.
- The price of electricity is fixed
- Each car runs 6 times per day and the battery is discharged by different (drive) intervals

Table 3 - The results of the simulation of the 2nd scenario

No. of EVA	No. of CSA	Max waiting time (min)	Max. no. of EVA in the queue	Mean waiting time in the queue (min)
10	5	4,4	2	1.3
20	5	18,6	6	4.7
60	15	27.3	12	5.8
100	15	60.6	35	11.2
100	30	22.7	8	2.4

As it can be seen from Table 3, the results show, that the variations of the capacity of batteries has the significant impact on mean waiting time in the queue. If the results from Scenario 1 and Scenario 2 are compared, the significant increase of the waiting time can be seen. The maximal waiting time was even 60.6 minutes in case of the simulation 4 where 15 charging stations and 100 electrical vehicles are considered. Generally, the waiting time is higher which is obviously caused by the longer charging time.

Scenario 3

The third scenario shows the simulation with the dynamic price of electricity. The Charging time and the capacity of battery have the distribution according to Table 2.

The preconditions:

- The Charging time is different (30-60 minutes)
- The capacity of battery is 35-60 kW and the charging starts if the capacity is below 8 kW.
- The price of electricity is various based on the schedule (21:00 – 6:00 – cheap, 6:00 – 21:00 – expensive). For the simulation purpose, only these two periods are considered.
- Each car runs randomly per day and the battery is discharged by different (drive) intervals

As it can be seen from Table 4 and Table 5, the results show one important outcome. The dynamic price can additionally increase the waiting time in the queue as people want to use the opportunity to charge their vehicles cheaper. This could be theoretically reduced by an online reservation system.

Table 4 - The results with the simulation considering cheap time

No. of EVA	No. of CSA	Max waiting time (min)	Max. no. of EVA in the queue	Mean waiting time in the queue (min)
10	5	6.2	2	1.7
20	5	17.2	7	4.9
60	15	31.4	14	6.2
100	15	68.6	42	12.9
100	30	29.1	15	3.5

Table 1 - The results of the simulation considering of expensive time

No. of EVA	No. of CSA	Max waiting time (min)	Max. no. of EVA in the queue	Mean waiting time in the queue (min)
10	5	0.0	0	0.0
20	5	4.7	1	1.8
60	15	6.5	2	2.1
100	15	26.1	8	3.4
100	30	5.4	1	0.9

VII. CONCLUSION

In this article, the use case related to the charging of electrical vehicles is designed, described, modeled and the results are presented. In addition, the proof is provided why the modeling of smart cities scenarios is needed. The model is based on Multi-Agents Systems and designed with SMArt City Evaluation Framework (SMACEF). The use case is simulated with three different scenarios. The results clearly show three main outcomes.

First, the number of charging stations versus the number of electrical vehicles is crucial for the waiting time which can the drivers spend in the queue. The simulation model like presented in this article can be used for optimal deployment of charging stations. Second, the variations of the capacity of batteries has the significant impact on mean waiting time in the queue. As the results show, the impact is even bigger than the number of charging stations in this use case. Third, the dynamic price can additionally increase the waiting time in the

queue as people want obviously use the opportunity to charge their vehicles cheaper.

The additional step can be to add other agents to the model as it can be seen in Figure 8, define new Key Performance Indicators (KPIs) and simulate another scenarios. The example of the agents can be lighting system or transportation system. The example of another KPIs can be emission or return on investments.

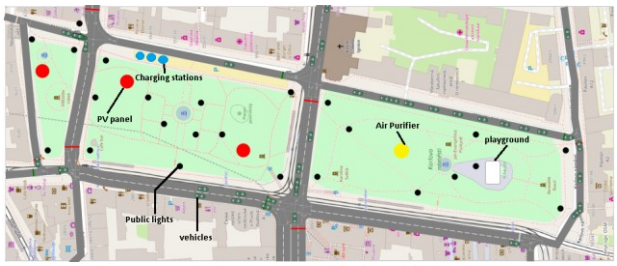

Figure 8 - Charles Square with the additional agents

ACKNOWLEDGEMENTS

This paper was prepared thanks to project MAVEN, funded by the EC Horizon 2020 Research and Innovation Framework Programme, under Grant Agreement No. 690727.

VIII. REFERENCES

[1] Lom, M.; Přibyl, O., Modeling of Smart City Building Blocks Using Multi-Agent Systems, Neural Network World. 2017, 2017(27), 317-331. ISSN 1210-0552.

[2] Lom, M.; Přibyl, O., SMArt City Evaluation Framework (SMACEF): Is a Smart City Solution Beneficial for Your City?, Journal of Systemics, Cybernetics and Informatics. 2017, 2017(Volume 15 - Number 3), 60-65. ISSN 1690-4524.

[3] Přibyl, O.; Lom, M.; Přibyl, P., Smart Charles Square: Modeling interconnections of basic building blocks in Smart Cities, In: 2017 Smart Cities Symposium Prague (SCSP). New York: IEEE Press, 2017. ISBN 978-1-5386-3825-5.

[4] Pribyl, O., Pribyl, P., Lom, M., & Svitek, M. (2018). Modeling of Smart Cities based on ITS architecture. IEEE Intelligent Transportation Systems Magazine.

[5] Frade, I., Ribeiro, A., Gonçalves, G., & Antunes, A. P. (2011). Optimal location of charging stations for electric vehicles in a neighborhood in Lisbon, Portugal. Transportation Research Record, 2252(1), 91-98.

[6] Datta, Amarjit, Brian K. Ledbetter, and M. Ashiqur Rahman. "Optimal Deployment of Charging Stations for Electric Vehicles: A Formal Approach." Distributed Computing Systems Workshops (ICDCSW), 2017 IEEE 37th International Conference on. IEEE, 2017.

[7] Chung, S. H., & Kwon, C. (2015). Multi-period planning for electric car charging station locations: A case of Korean Expressways. European Journal of Operational Research, 242(2), 677-687.

[8] Qin, H., & Zhang, W. (2011, September). Charging scheduling with minimal waiting in a network of electric vehicles and charging stations. In Proceedings of the Eighth ACM international workshop on Vehicular inter-networking (pp. 51-60). ACM.

[9] J. S. Carson, "Introduction to modeling and simulation," Proceedings of the 2004 Winter Simulation Conference, 2004., Washington, DC,USA, 2004, pp. 16.

[10] L. Schruben, "Analytical simulation modeling," 2008 Winter Simulation Conference, Miami, FL, USA, 2008, pp. 113-121.